www.maskinisten.net

Holder 1888

A 15

Betriebsanleitung
Operating Instructions
Notice d'emploi
Instrucciones de servicio

1971

Gebrüder Holder Maschinenfabrik
7418 Metzingen Western Germany

www.maskinisten.net

A) Description

This manual gives instructions for service and careful maintenance of the tractor. It belongs in the hands of the tractor operator.

Four-wheel drive, compact design, steering effective on all four wheels (pivotal steering) are the particular features of the new Holder Cultitrac model A 15. This special-type tractor has been designed with view to application in densely planted cultivations.

The track width can be adjusted to 480 mm or 630 mm by turning the wheels.

When leaving the works the tractor is ready for service. Engine, gearbox and hydraulic supply tank are filled with oil. The radiator contains all the year round an anti-freeze mixture effective up to — 20° C.

In case of queries please state the following details:

a)	Tractor type	e. g. A 15
b)	Engine serial No.	e. g. D 12 10114
c)	Tractor serial No.	e. g. 1 10125
d)	Date of sale:	e. g. 1/10/69
e)	Operation hours	e. g. 200 hours

www.maskinisten.net

B) Technical Data

1. Engine

a) Manufacturers:	Gebrüder Holder Maschinenfabrik, 7418 Metzingen/Württ.
b) Type:	HD 1
c) Design:	In-line vertical
d) Mode of operation:	Two-stroke
e) Combustion:	Direct fuel injection
f) Lubrication:	Fresh-oil lubrication
g) Cooling:	Water-cooling
h) Cooling water filling:	3,8 ltr. – (Anti-freeze mixture contained all the year round)
i) Cylinders:	1
j) Cylinder bore:	88 mm
k) Stroke:	90 mm
l) Cylinder capacity:	550 cc
m) Engine capacity:	12 HP at 2600 rpm after DIN 70020 (German specification standards)
n) Fuel consumption:	200 g/HP/h
o) Oil supply in oil tank:	1,0 ltr.
p) Oil supply in governor housing:	0,75 ltr.
r) Commencement of delivery of fuel injection pump:	6,6 mm bTDC
s) Air filter:	Large oil-bath air filter, on request with cyclone preselector
t) Fuel tank capacity:	6,5 ltr.

www.maskinisten.net

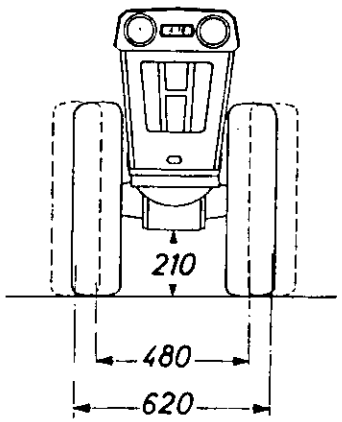

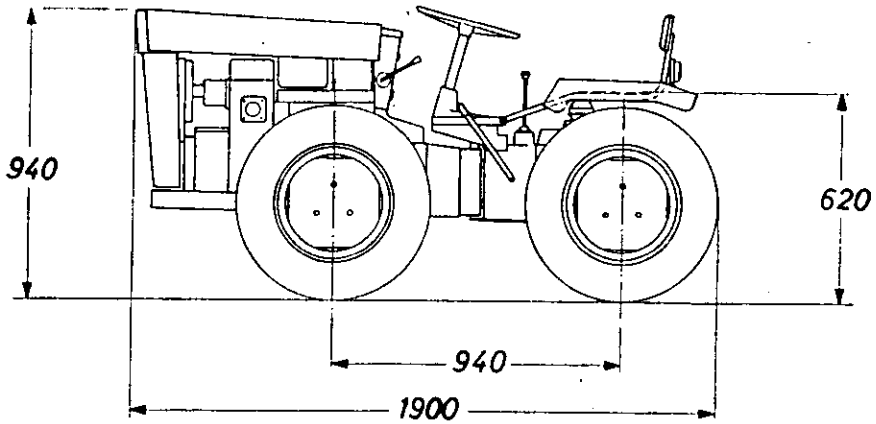

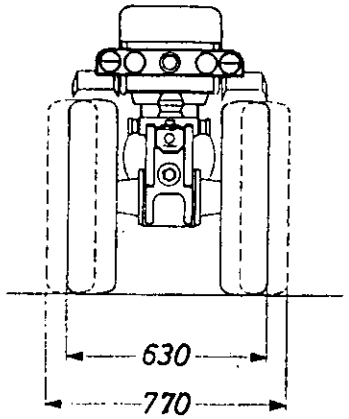

The particular attention of clients should be drawn to points v – x!

v) Tyres: All four tyres must have the same diameter and the same tyre pressure. No other tyres than the originally fitted size 6 – 14 AS must be used!

w) Track width: The track width of 63 cm must not be exceeded. Hub spacers are not permissible. Warranty claims must be rejected if the track width has been extended of tractor owner's own accord.

x) Ballast weights: Ballast weights of 25 kg per wheel can be fitted to front and rear wheels. Warranty claims must be rejected if a ballast of more than 25 kg has been used with each wheel.

www.maskinisten.net

2. Transmission

a) Clutch: Single-plate dry clutch.

b) Gearbox: 6 forward gears (0,5–20 km/h) and 3 reverse gears. Drive from engine is taken by splined propeller shaft and universal joints through gearbox to rear differential, returning to front axle via twin propeller shaft. Pedal-operated front wheel diff-lock.

c) Speeds with tyres 6–14 AS:

Forward:	1st	gear	1,27 km/h
	2nd	gear	1,93 km/h
	3rd	gear	3,72 km/h
	4th	gear	6,61 km/h
	5th	gear	10,03 km/h
	6th	gear	19,34 km/h
reverse:	1st	gear	1,27 km/h
	2nd	gear	1,93 km/h
	3rd	gear	3,72 km/h

d) Diff-lock: Front-wheel, foot-pedal operated diff-lock.

e) P.T.O.: Standard splined shaft with 540 rpm at 2100 engine rpm or 760 rpm at max engine revs (2600 rpm)

f) Steering: Spiral-gear steering with back-lash eliminator.

g) Minimum inner turning circle: 75 cm

h) Brakes: Foot pedal operates front wheel brakes, hand lever operates rear wheel brakes. Both brakes act independently on all 4 wheels through the transmission.

i) Trailer hitch: Revolving and detachable

j) Hydraulics: Holder one-cylinder hydraulics with Bosch gear pump (5,5 ltr/min.). Lifts also with decoupled transmission. Max. lifting capacity 350 Kpm or approx. 740 kg on field bar.

www.maskinisten.net

k) Hydraulic oil:	approx. 1,6 ltr. (SAE 20 HD – B – oil for diesel engines)
l) Implement lift:	Holder three-point linkage
m) Electrical equipment:	Bosch dynamo Type LJ/GEH 90/12/1800 FR 15 Bosch starter Type AL 53/43/T 4 Battery: 12 V – 24 Ah 2 headlights (dimlight and parking light) 2 front traffic indicators 2 rear traffic indicators 2 rear reflectors 2 brake warning lights with switch 1 licence plate light 1 horn 1 fuse box 1 7-pole socket
n) Weight:	incl. tyres 6 – 14 AS and Holder three-point linkage
Total weight:	495 kg
Front axle pressure:	310 kg
Rear axle pressure:	190 kg
Permissible load on rear axle:	380 kg
Permissible load on front axle:	380 kg
Permissible load on trailer hitch:	175 kg

Permissible loads on axles only applicable for road drive!

www.maskinisten.net

C) Preparations for taking tractor into service!

Please pay attention to instructions on page 23!

1. Engine

a) Check oil level daily. Open cover of lubrication oil container (13 Ill. 1), take diprod (13a Ill. 3) out and fill with HD-B-oil for diesel engines almost to container edge. Oil level must never be below diprod mark (MINIMUM).

For temperatures below 0° C:	SAE 10 HD-B oil
For temperatures from 0° — +30° C:	SAE 20 HD-B oil
For temperatures over +30° C:	SAE 30 HD-B oil

HD-B-SAE 10 oil is filled in from the works from 1st October till February inclusive, and HD-B-SAE 20 oil from 1st March till September incl. To avoid damages caused through inferior lubrication oils use only high-grade branded oils. (See page 36). The brand of oil first chosen should be continuously used.

b) **Oil bath air filter:**

Remove oil basin (22 Ill. 12) and top-up to mark with the same brand of oil as used in engine.

c) **Cooling water**

If possible, check when engine is cold. Be careful when checking cooling water straight after shutting engine off. In this case steam escapes with excess pressure. Lift radiator cap (14 Ill. 3) very slowly and let excess pressure escape before removing it completely.

Attention: The machines are shipped from the works all the year round with an anti-freeze mixture contained in the cooling water (frost-proof up to — 20° C). When taking engine over and when frost is expected check cooling water concentration. If necessary, add anti-freeze mixture.

d) The V-belt (27 Ill. 11) has the right tension if you can press it with your fingers approx. 1 cm between the fan and dynamo pulleys. For re-tightening V-belt slacken both screws of belt bracket and press dynamo outwards till the V-belt has the right tension. Tighten screws (80 and 81 Ill. 11).

www.maskinisten.net

e) **Filling fuel tank:**
Use only clean diesel oil. Dirty fuel causes excessive wear of fuel injection pump and injection nozzle.
Ventilate (bleed) fuel system. Open screw (74 Ill. 9) till fuel comes out without bubbles.

f) **Governor housing**

Oil level sight glass (31 Ill. 2) 0,75 ltr. SAE 20 engine oil.
If the tractor is on level ground the oil should be visible at the centre of the oil sight glass.

g) **Gearbox:**

Front: Oil level sight glass (41 Ill. 1) SAE 80 gear oil
Rear: Oil level sight glass (40 Ill. 2) SAE 80 gear oil

If the machine is on level ground the oil should be visible at the centre of the oil sight glass.
Hydraulic oil supply tank: SAE 20 HD-B oil for diesel engines, lubricate nipples (S 1 – S 9 – see Ill. 1, 2, 3, 5). First remove protective coating of paint from lubrication nipples.

www.maskinisten.net

D) Taking tractor into service

1. Preparations

a) Shift selector lever (1 Ill.1) to neutral.
b) Move throttle lever (32 Ill. 2) to approx. 3/4 revs.
c) Insert key into ignition (8 Ill. 4) so that red charging lamp (9 Ill. 4) lights up.
d) Push blue **starter knob of injection pump (37 Ill. 10).**
e) Push starter knob on dashbord (11 Ill. 4), release starter knob as soon as engine springs to life.
f) Move throttle lever back to low revs.

2. Driving

Before using selector lever throttle down to idling speed (32 Ill. 2).Depress clutch pedal (36 Ill. 2).
Open hand brake (3 Ill. 2).
Preselect desired gear range with preselector lever (2 Ill. 2). Engage gear lever (1 Ill. 1) (gear shift diagram see Ill. 13). If the selected gear proves difficult to engage depress clutch pedal (36 Ill. 2) a second time (never use force). Release clutch pedal slowly. Control speed within selected gear range with throttle (32 Ill. 2).

> When driving on rising ground, and particularly when turning on slopes be very careful. Test yourselves with the implements you use the overturning angle of your tractor under consideration of all safety measures. Wheel weights increase safety.

Never run engine in unventilated space!
Danger of poisoning through carbon oxyde!

3. Braking

The foot brake (21 Ill. 1) is used when the tractor is moving. The brakes have the advantage of acting at any time independently on all four wheels. The hand brake (3 Ill. 1) is released by pushing the button of the handle grip. When parking the tractor on rising ground use suitable chocks, shut engine off, engage low gear and lower attached implements.
If the tractor is used with trailer attached local safety regulations must be observed.

www.maskinisten.net

4. Trailer Lighting

Traffic regulations in Germany prescribe that the distance between tractor and outer trailer edge, as measured on the headlight beam of the tractor, must not be more than 400 mm. Also the trailer must be equipped with rear reflectors, traffic indicators and braking lights. The 7-pole socket is commercially available under the number DIN 72576.

Always pay attention to your local traffic and safety regulations.
The use of any trailed vehicle behind the tractor, particularly drive axle or other trailers, is at your own risk!

5. Diff-Lock

The diff-lock rigidly locks the two front wheels to prevent either of them from slipping. To apply diff-lock press diff-lock foot pedal (35 Ill. 4). With differential locked the tractor must be steered straight ahead only.

6. Track width adjustment

To alter track width change both pairs of wheels from right to left. Make sure that arrow on tyre always points forward. The fenders can be adjusted to the relevant track width. Tyres of all four wheels must be the same.
Check wheel nuts from time to time, particularly after changing wheels. Larger tyre sizes should be avoided for the following reasons:

a) they may give higher road speeds than permitted by local traffic regulations.
b) they will interfere with the steering lock.
c) they will put too much stress on the transmission.

The use of hub spacers is not permissible!

7. Hydraulic Lift

The lift arms (66 Ill. 2) are actuated through lever (34 Ill. 4). The intermediate lever position (0) locks the implement in position. At the bottom of its travel the lever is held and the implement in its floating position. The control valve is provided with a second hydraulic connection (25 Ill. 4).

Caution! When parking a tractor unattended, or even during working breaks, the implement should be lowered to the ground to avoid accidents.

www.maskinisten.net

8. Stopping Tractor

Let engine run idle, throttle engine revs., shift selector lever (1 Ill. 1) into neutral, put on hand brake (3 Ill. 1).

9. Shutting engine off

Let machine run idle for a short while. Move throttle lever(32 Ill. 2) downward to idle position. Remove ignition key (8 Ill. 4).

www.maskinisten.net

E) Service and maintenance

(See service chart F on pages 34 and 35).

1. Engine

a) **Change oil in oil tank, rinse oil tank and clean oil filter (70 Ill. 9)** after every 200–250 operation hours. Use only high-grade branded oil for diesel engines. (See page 26 C 1–a).

b) **Ventilation („bleeding")**
Attention: After every oil change open ventilation screw of oil filter (69 Ill. 9) and wait till oil comes out without bubbles. Open hollow screw (84 Ill. 11) of oil pump till suction pipe has been bled as well.

c) After 500 hours remove **oil drip plate (75 Ill. 9) and oil drip strainer (76 Ill. 9)** and wash. The graphite seal (77 Ill. 9) must be fitted in a way that the two slots lie diagonally across the longitudional axis of the machine. (See Ill. 9). The seal should be replaced. Tighten four hexagon screws uniformly.

d) Clean **exhaust and outlet ports** after every 100 hours of operation. Use an angular stick of wood to decarbonize outlet port (x Ill. 10). Thereby bring piston in a position that outlet port is closed from inside (See Ill. 10). Burn exhaust pipe out and loosen oil carbon deposits by tapping the exhaust pipe from outside.

e) **Oilbath air filter.** Clean according to dirt development, if necessary daily. Remove oil basin (22 Ill. 12) and filter inset (79 Ill. 12) and wash with diesel oil. Let filter inset dry well and fill oil basin with fresh engine oil up to mark.

f) Change oil in **gearbox for auxiliary pumps** after 1000 operation hours. Drain oil on drain plug (30 Ill. 9) and refill on filler plug (39 Ill. 9) with 0,75 ltr. SAE 20 HD-B oil to centre of sight glass (31 Ill. 9).

g) **Cooling system**
If frost is expected check cooling water concentration (see C – 1 c).
Re-tighten V-belt (see C – 1 d).
Clean radiator. Remove dirt deposits by blowing from engine side through radiator shutter with compressed air, or with a jet of water.

h) **Replacing fuel filter (29 Ill. 2).**
The fuel filter cannot be cleaned.
The filter of the fuel tank (29 Ill. 2) must be replaced after approx. 500 operation hours.

www.maskinisten.net

i) **Ventilation („bleeding") of fuel system**
The fuel system must be ventilated (bled)

a) before starting engine for the first time if fuel tank is empty

b) when fuel filter is replaced, or if air has entered pipes.
Open ventilation screw (74 Ill. 9) of injection pump.
Tighten ventilation screw only after fuel has come out without bubbles.

j) **Max. revs.** Max. engine revs. must not be exceeded. If set screw (73 Ill. 9) is re-adjusted any warranty claims must be rejected by the manufacturers!

2. Tractor

a) **Battery maintenance**

Check battery (18 Ill. 1) every 4 weeks, in tropical countries every two weeks. The acid level must be 10–12 mm above upper edge. Use only distilled water. Grease connection terminals lightly with acid-free Vaseline.

b) **Grease all lubrication nipples** (S 1 – S 9) after every 200–250 operation hours (monthly). If "Molykote" grease is available use same to grease lubrication nipples of upper and lower universal shafts (2 each). For this purpose turn steering to full lock.

c) **Front gearbox**
Change oil for the first time after 500 hours, then every 2500 hours. The front gearbox holds 1,5 ltr. SAE 80 gear oil. Drain screw (15 Ill. 2), oil sight glass (41 Ill. 1), oil filler screw (44 Ill. 1).

d) **Rear gearbox**
Change oil for the first time after approx. 500 hours, then after every 2500 hours. The rear gearbox contains 3,2 ltr. SAE 80 gear oil. In horizontal position of the tractor the oil should be visible at the centre of the sight glass (40 Ill. 2). Drain screw (68 Ill. 7), filler screw (43 Ill. 1).

e) **Hydraulic oil** change for the first time after 500 hours, then every 2500 hours. (Approx. 1,6 ltr. HD-B SAE 20 engine oil.) Automatic ventilation on ventilation filter (19 Ill. 1) actuated by lowering and lifting hydraulics several times. Clean ventilation filter after every 500 operation hours with diesel oil (19 Ill. 1).

www.maskinisten.net

f) **Brakes and lighting system**
Have brakes, clutch and lighting system checked from time to time, at least once a year, through an accredited service station. This should be particularly done if the tractor is frequently used on public roads. All moving parts, such as shaft of the clutch, brake pedal bearings etc. should be given a few drops of oil every week.

g) **Washing tractor**
Before washing down the machine with water, disconnect battery terminals or, still better, remove battery entirely. Protect air filter and governor switch from direct contact with water.
Before putting tractor away for any length of time clean it thoroughly and lubricate well.

h) **Transporting persons**
Transporting of persons is not permissible unless a suitable seat has been provided. Pay attention to your local safety regulations.

www.maskinisten.net

F) Service Chart

1st Service

A	B	C	D
To be carried out through agent immediately upon receipt of tractor and before taking machine into service.	**When handing tractor over to client.** If possible give all instructions in the presence of tractor owner or his authorized person.	**After every 8–10 operation hours (daily).**	**After every 100 operation hours.**
1. Grease all lubrication nipples. 2. Check oil level of engine and gearbox. a) Engine: Max. oil level at upper mark of diprod. Use only clean branded HD-B oil for diesel engines. For temperatures below O° C HD-B-SAE 10, from 0– +30° C HD-B-SAE 20 and over +30° C HD-B-SAE 30. From the works the machines are filled with HD-B-SAE 20 oil from 1st March till September, and with HD-B-SAE 10 oil from 1st October till February inclusive. b) Oil quantity in gearbox for auxiliary pumps (engine): check at sight glass. c) Rear transmission: oil level at centre of sight glass. SAE 80 gear oil. d) Front transmission: check oil level at sight glass. SAE 80 gear oil. 3. Re-tighten all screws, particularly wheel nuts. 4. Check oil level in air filter, if necessary top-up with engine oil. 5. Check cooling water level. If frost is expected check concentration. 6. Check hydraulic oil (HD-B-SAE 20). 7. Check tyre pressure. 1,0 atm. 8. Trial run engine and check function of tractor and hydraulic system.	1. Check whether tractor is complete. Check tool kit. 2. Give instructions in accordance with operation manual. 3. Before taking tractor into service, in the presence of client: a) Check oil level in engine. Explain lubrication system and oil change. b) Explain cooling system. If frost is expected check cooling water concentration. c) Check V-belts for tightness. d) Rear transmission; explain sight glass and oil change. e) Front transmission: explain sight glass and oil change. f) Point out lubrication nipples, oil control screws and lubrication points. g) Explain cleaning of ventilation filter and hydraulic tank. h) Explain fuel filter and ventilation of fuel pipes. i) Check oil level of air filter and explain cleaning. k) Point out to battery service. l) Explain outlet ports and cleaning of exhaust. 4. Check tyre pressure. 1,0 atm. 5. Check function of engine and transmission. Demonstrate diff-lock and hydraulic lift. Point out to necessity of discharging hydraulics and lowering implements when parking tractor. (Danger of accidents.) 6. Check electrical system. Explain fuse box and battery service. 7. Demonstrate implements in the field. 8. Explain servicing of implements according to operation manual. 9. Make out service check book and fill in 1st check. 10. Fill in warranty file card and return to Messrs. Holder. 11. Pay attention to local safety and traffic regulations.	1. Check oil level in engine. Top-up to max. mark. Oil quality see column A – 2 a. 2. Depending on dust development clean air filter and top-up with fresh engine oil. 3. a) Check cooling water level, if necessary increase anti-freeze mixture. b) If necessary check and clean radiator grille.	1. Check oil level in gearbox for auxiliary pumps (engine), if necessary top-up with HD-B-SAE 20 engine oil. 2. Check oil level of rear gearbox on sight glass. 3. Front transmission: Check oil level on lateral sight glass, if necessary top-up with SAE 80 gear oil. 4. Check stop bolts. 5. Clean exhaust and outlet port of engine.

www.maskinisten.net

2nd Service E

After every 200–250 Operation hours.
If possible all jobs should be carried out and all explanations given in the presence of the tractor owner or his authorized person.

1. Oil change in engine.
   a) Drain and rinse oil tank. Clean oil filter and fill in fresh engine oil. (Oil quality see column A.) Ventilate filter basin of oil filter and oil suction pipe!
   b) If necessary clean oilbath air filter and renew oil.
   c) Check V-belt tension.
   d) If necessary, clean radiator fins with compressed air, check cooling water and if frost is expected add anti-freeze mixture.
2. Grease all lubrication nipples (S), particularly of universal shafts.
3. Check complete electrical system, including battery.
4. Check clutch play and if necessary readjust. Play of clutch pedal approx. 1–2 cm.
5. Check brakes, if necessary readjust.
6. Tighten all screws.
7. Check tyre pressure 1,0 atm.
8. Test drive and if necessary repeated practical demonstration of implements.
9. Fill in 2nd Service Cheque.

3rd Service F

After every 450–500 operation hours.
Latest 6 months after handing machine over. If possible all jobs should be carried out and all explanations given in the presence of the tractor owner or his authorized person.

1. Oil change in engine (see column E–1 a.)
   a) Clean oil sump and strainer.
   b) Check nozzle holder for tightness.
2. Replace fuel filter in tank. (Do not clean.) Rinse fuel tank.
3. Hydraulic oil.
   a) Check oil level of hydraulic oil supply tank in lowered position. (Remove ventilation filter.)
   b) Change hydraulic oil for the first time, thereafter every 2500 operation hours (1,6 ltr. HD-B-SAE 20 oil).
   c) Clean hydraulic ventilation filter in diesel oil.
4. Change oil in gearbox for the first time, thereafter every 2500 operation hours. SAE 80 gear oil. Front gearbox 1,5 ltr., rear gearbox 3,2 ltr.
5. Steering.
   a) Check steering play and if necessary use shims.
   b) Check stop bolt.
6. Make out 3rd service cheque.

4th Service G

After every 2500 operation hours.
We recommend to have the following jobs carried out through an accredited Holder Service Station:

1. Engine:
   a) Renew oil filling in gearbox for auxiliary pumps (engine). Oil quantity 0,75 ltr. HD-B-SAE 20 engine oil.
   b) Check compression pressure.
   c) Drain engine oil. Refill with HD-B oil for diesel engines (see column E–1 a).
   d) Check delivery of lubrication oil pump.
2. Check engine clutch.
3. Have fuel injection pump checked through a Bosch Service Station.
4. Change oil in gearbox
   Front gearbox: 1,5 ltr., rear gearbox 3,2 ltr. SAE 80 gear oil.
5. Check steering play.
6. Change hydraulic oil (1,6 ltr. HD-B-SAE 20 engine oil).
7. Check silent bloc shock absorber, if necessary replace.
8. Re-tighten all screws.
9. Remove and rinse fuel tank. Replace filter.
10. Make out 4th cheque.

SAE 80 gear oil: front transmission, rear transmission
HD-B-SAE 20 engine oil: hydraulic system, gearbox for auxiliary pumps (engine)
HD-B-SAE 10, HD-B-SAE 20, HD-B-SAE 30: depending on outside temperatures.
In case of excessive loss of oil look for cause!

www.maskinisten.net

The oils to be used with Holder diesel engines must be in conformity with the American Military Specification

MIL-L-2104 B

The following oils correspond to the above mentioned specification and are recommended by us:

1. **ARAL**

ARAL diesel engine oil SAE 10 W	= SAE 10 W
ARAL diesel engine oil SAE 20 W/20	= SAE 20
ARAL diesel engine oil SAE 30	= SAE 30

2. **BP**

BP Vanellus-T-SAE 10	= SAE 10 W
BP Vanellus-T-SAE 20	= SAE 20
BP Vanellus-T-SAE 30	= SAE 30

3. **ESSO**

Essolube HDX SAE 10 W	= SAE 10 W
Essolube HDX SAE 20	= SAE 20
Essolube HDX SAE 30	= SAE 30

4. **GASOLIN**

GASOLIN HD SAE 10 W	= SAE 10 W
GASOLIN HD SAE 20-W-20	= SAE 20
GASOLIN HD SAE 30	= SAE 30

5. **MOBIL-OIL**

MOBIL Delvac Oil 1210	= SAE 10 W
MOBIL Delvac Oil 1220	= SAE 20
MOBIL Delvac Oil 1230	= SAE 30

6. **SHELL**

SHELL Rotella Oil S SAE 10 W	= SAE 10 W
SHELL Rotella Oil S SAE 20 W/20	= SAE 20
SHELL Rotella Oil S SAE 30	= SAE 30

7. **VALVOLINE**

VALVOLINE Super HPO SAE 10	= SAE 10 W
VALVOLINE Super HPO SAE 20	= SAE 20
VALVOLINE Super HPO SAE 30	= SAE 30

8. **VEEDOL**

VEEDOL Engine oil (Heavy duty plus) HD 901 Special	= SAE 10 W
VEEDOL Engine oil (Heavy duty plus) HD 902 Special	= SAE 20
VEEDOL Engine oil (Heavy duty plus) HD 903 Special	= SAE 30

Our foreign agents are requested to check the oils they have so far recommended, and which are being used by Holder tractor owners, in the light of these instructions. This means, that the relevant mineral oil companies should be asked whether their recommended oils are in conformity with the American Military Specification

MIL-L-2104 B

www.maskinisten.net

G) Three-point Linkage

The link carrier assembly (63 Ill. 6 and 7) is fixed in two different positions, depending on implement. For attachment of the reversible plough the fixing bracket (A Ill. 6) points downwards (see Ill. 6). For attachment of the rotary hoe a flat iron is fitted in place of the adjustable upper linkage arm. For attachment of the mower the linkage carrier assembly is turned through 180° (see Ill. 7).

Three-point Linkage for vertical lift

For all cultivators and similar implements the linkage carrier ass. (62 Ill. 8) with short upper linkage arm (67 Ill. 8) is used.

Trailer hitch:

The trailer hitch type 3050 is not automatic and must only be used for the attachment of **single-axle** trailers with a permissible weight not exceeding 2000 kg.

H) How to value a tractor?

A motorcar is generally valued according to driven kilometers and age.

A tractor is best valued according to operation hours and age, with the following guiding principles:

1	operation hour	=	75 driven km
10	operation hours	=	750 driven km
250	operation hours	=	18750 driven km
500	operation hours	=	37500 driven km
1000	operation hours	=	75000 driven km
2000	operation hours	=	150000 driven km
2500	operation hours	=	187500 driven km

www.maskinisten.net

1. Selector lever
2. Selector lever (preselection)
3. Hand brake lever
4. P.T.O. selector lever
5. Warning light
6. Horn button
7. Blinker switch
8. Ignition lock with light switch
9 Charging control lamps
10. Fuse box
11. Starter knob
12. Fuel (diesel oil) tank cover
13. Cover of lubricating oil container (engine)
13a. Diprod
14. Radiator cover
15. Oil drain plug/front gearbox
16. Hydraulic pump
17. Cyclone preselector
18. Battery
19. Ventilation filter of hydraulic oil supply tank
20. Brake light switch
21. Brake pedal
22. Oil tank of air filter
23. Air-filter
24. Regulator and cut-out
25. Second hydraulic connection for additional implements
26. Dynamo
27. V-belt for dynamo
28. Spark plug holder
29. Fuel filter
30. Oil drain screw of gearbox for auxiliary pumps (engine)
31. Oil sight glass of gearbox for auxiliary pumps (engine)
32. Throttle lever
33. Starter
34. Hydraulic operation lever
35. Foot lever for front diff-lock
36. Clutch pedal
37. Starter knob (blue)
38. Cooling water drain plug RH and LH (engine)
39. Oil filler screw (gearbox for auxiliary pumps (engine)
40. Oil level sight glass, rear gearbox
41. Oil level sight glass, front gearbox
42. Hydraulic cylinder
43. Oil filler screw, rear gearbox
44. Oil filler screw – front gearbox
45. Tractor serial number
46. Tool box
47. Injection nozzle
48. Traffic indicators
49. Seat buffers
50. Rear light
51. Rear reflector
52. Licence plate light
53. 7-pole socket
54. Pin for link carriers and trailer hitch
55. Left drawrod
56. Lock
57. Field bar
58. Upper linkage arm, long
59. Lower linkage arm
60. Right drawrod (adjustable)
61. Standard splined P.T.O. shaft
62. Link carrier ass., long for vertical lift
63. Link carrier ass. short for 3-point linkage
64. Trailer hitch
65. Pin for trailer hitch
66. Hydraulic lift arms
67. Upper linkage arm, short

www.maskinisten.net

68. Oil drain screw, rear transmission
69. Ventilation screw of oil filter
70. Oil filter
71. Oil suction pipe, filter-oil pump
72. Set screw for idling speed
73. Set screw for max. revs.
74. Fuel ventilation screw
75. Oil drip plate (cover)
76. Oil collector strainer
77. Graphite seal
78. Engine serial number (embossed)
79. Filter cartridge (wire gauze)
80. Hex. nut for V-belt tension
81. Dynamo fixing screws
82. Suction pipe of oil return pump
83. Oil return pipe to oil tank
84. Oil suction pipe for oil delivery pump
85. Oil pressure pipe

S1 Lubrication nipple of fan blade
S2–4 Lubrication nipples of universal shafts
S5 Lubrication nipple of steering column
S6 Lubrication nipple of clutch pedal
S7–8 Lubrication nipple of hydraulic shaft
S9 Lubrication nipple of hydraulic cylinder

A) D

Cette n
les ma

Le nou
articul
ennem

La voie

Au mo
grena
dessou

Si vous

a) Type
b) Num
c) Num
d) Date
e) Heu

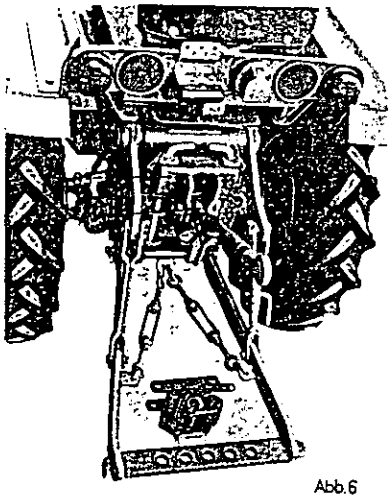

Abb.6

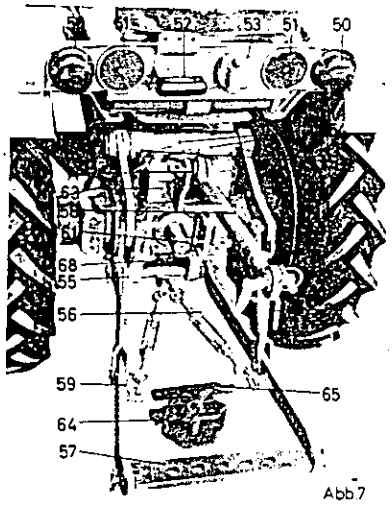

Abb.7

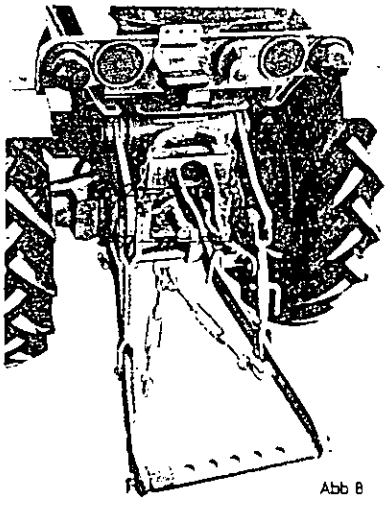

Abb 8

www.maskinisten.net

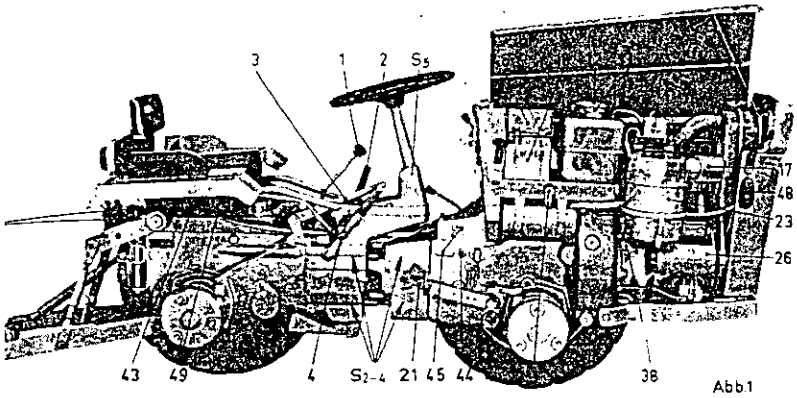

Abb.1

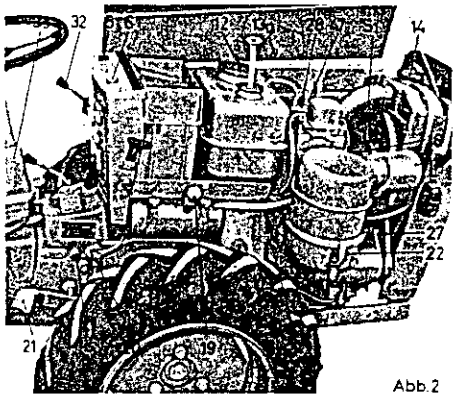

Abb.2

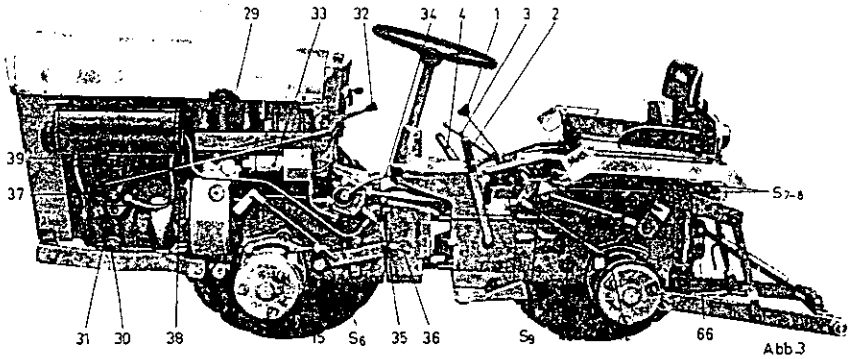

Abb.3

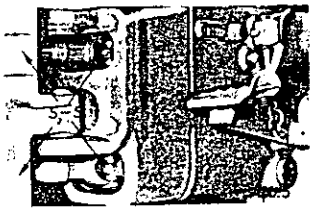

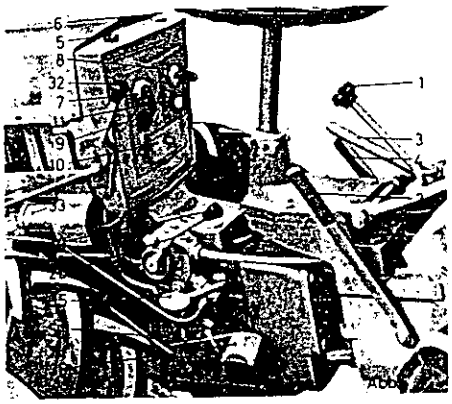

Abb.

www.maskinisten.net

www.maskinisten.net

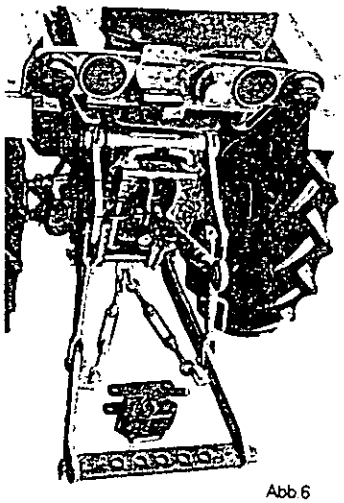

Abb.6

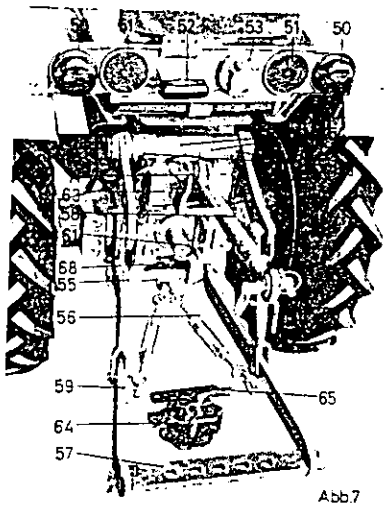

Abb.7

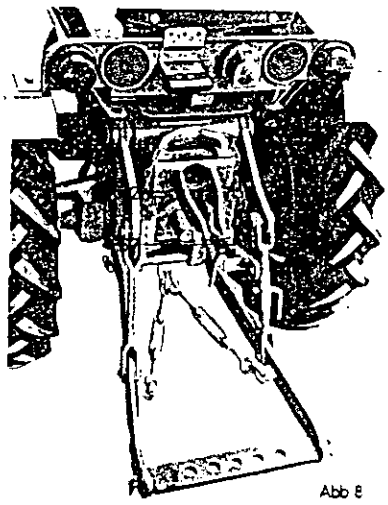

Abb.8

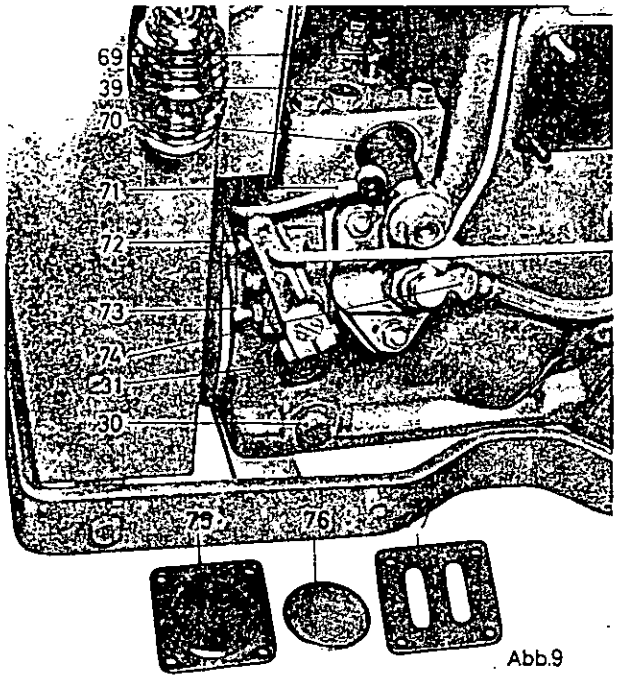

Abb.9

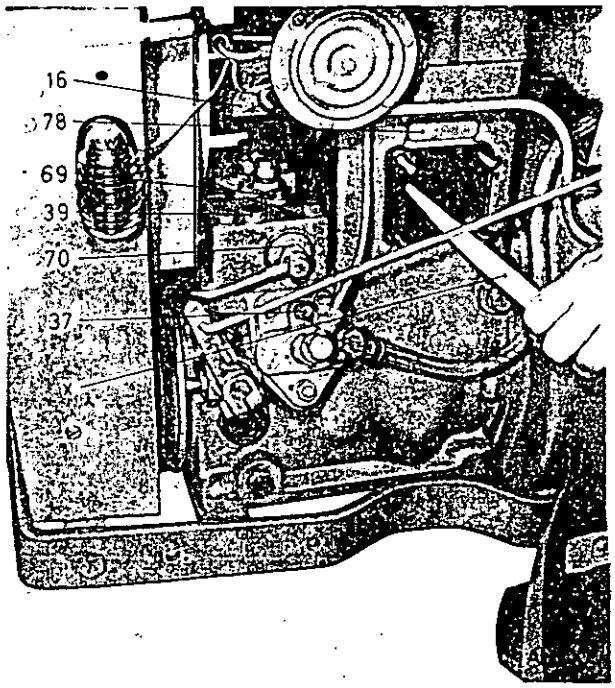

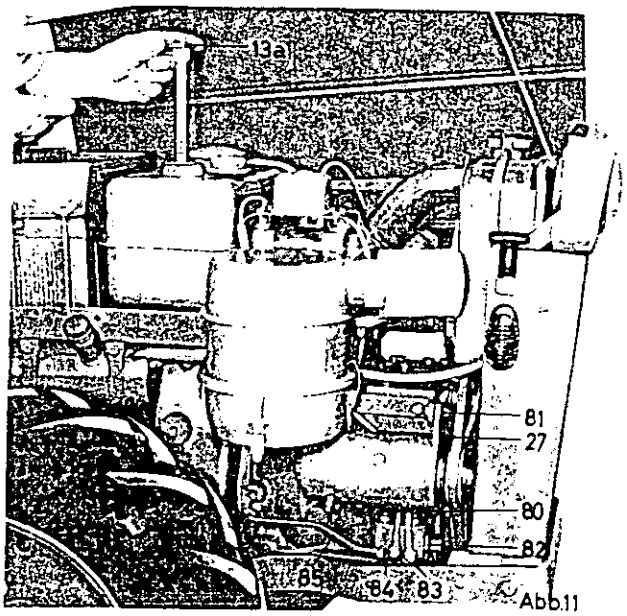

Abb.11

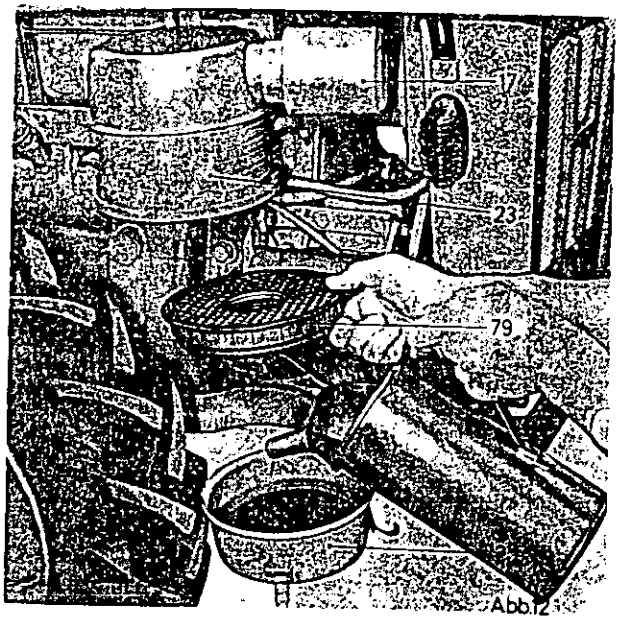

Abb.12

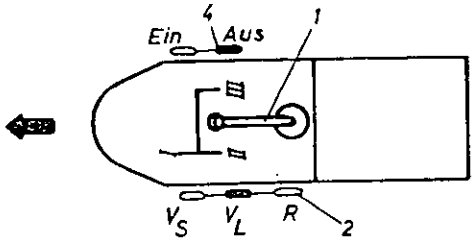

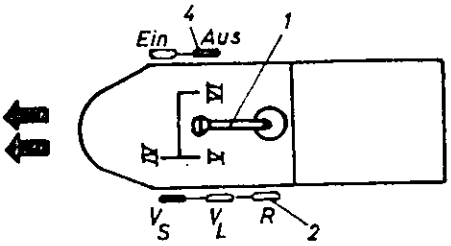

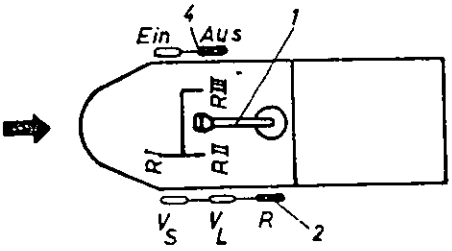

www.maskinisten.net

www.maskinisten.net

1. Selector lever
2. Selector lever (preselection)
3. Hand brake lever
4. P.T.O. selector lever
5. Warning light
6. Horn button
7. Blinker switch
8. Ignition lock with light switch
9 Charging control lamps
10. Fuse box
11. Starter knob
12. Fuel (diesel oil) tank cover
13. Cover of lubricating oil container (engine)
13a. Diprod
14. Radiator cover
15. Oil drain plug/front gearbox
16. Hydraulic pump
17. Cyclone preselector
18. Battery
19. Ventilation filter of hydraulic oil supply tank
20. Brake light switch
21. Brake pedal
22. Oil tank of air filter
23. Air-filter
24. Regulator and cut-out
25. Second hydraulic connection for additional implements
26. Dynamo
27. V-belt for dynamo
28. Spark plug holder
29. Fuel filter
30. Oil drain screw of gearbox for auxiliary pumps (engine)
31. Oil sight glass of gearbox for auxiliary pumps (engine)
32. Throttle lever
33. Starter
34. Hydraulic operation lever
35. Foot lever for front diff-lock
36. Clutch pedal
37. Starter knob (blue)
38. Cooling water drain plug RH and LH (engine)
39. Oil filler screw (gearbox for auxiliary pumps (engine)
40. Oil level sight glass, rear gearbox
41. Oil level sight glass, front gearbox
42. Hydraulic cylinder
43. Oil filler screw, rear gearbox
44. Oil filler screw – front gearbox
45. Tractor serial number
46. Tool box
47. Injection nozzle
48. Traffic indicators
49. Seat buffers
50. Rear light
51. Rear reflector
52. Licence plate light
53. 7-pole socket
54. Pin for link carriers and trailer hitch
55. Left drawrod
56. Lock
57. Field bar
58. Upper linkage arm, long
59. Lower linkage arm
60. Right drawrod (adjustable)
61. Standard splined P.T.O. shaft
62. Link carrier ass., long for vertical lift
63. Link carrier ass. short for 3-point linkage
64. Trailer hitch
65. Pin for trailer hitch
66. Hydraulic lift arms
67. Upper linkage arm, short

www.maskinisten.net

68. Oil drain screw, rear transmission
69. Ventilation screw of oil filter
70. Oil filter
71. Oil suction pipe, filter-oil pump
72. Set screw for idling speed
73. Set screw for max. revs.
74. Fuel ventilation screw
75. Oil drip plate (cover)
76. Oil collector strainer
77. Graphite seal
78. Engine serial number (embossed)
79. Filter cartridge (wire gauze)
80. Hex. nut for V-belt tension
81. Dynamo fixing screws
82. Suction pipe of oil return pump
83. Oil return pipe to oil tank
84. Oil suction pipe for oil delivery pump
85. Oil pressure pipe

S1 Lubrication nipple of fan blade

S2–4 Lubrication nipples of universal shafts

S5 Lubrication nipple of steering column

S6 Lubrication nipple of clutch pedal

S7–8 Lubrication nipple of hydraulic shaft

S9 Lubrication nipple of hydraulic cylinder

www.maskinisten.net

BL=blau
BR=braun
GE=gelb
GN=grün
GR=grau
RT=rot
SW=schwarz
VIO=violett
WS=weiß

1 Blinkleuchte vorn rechts
2 Scheinwerfer rechts m. Standlicht
4 Anlasser
5 Horn
6 Scheinwerfer links m. Standlicht
7 Blinkleuchte vorn links
8 Batterie
9 Regler
10 Lichtmaschine

11 Blinkgeber
12 Blinkschalter
13 Warnlicht Impulsgeber
14 Blinkkontrollampe Zugmaschine
15 Blinkkontrollampe Anhänger
16 Ladekontrollampe
17 Horndruckknopf

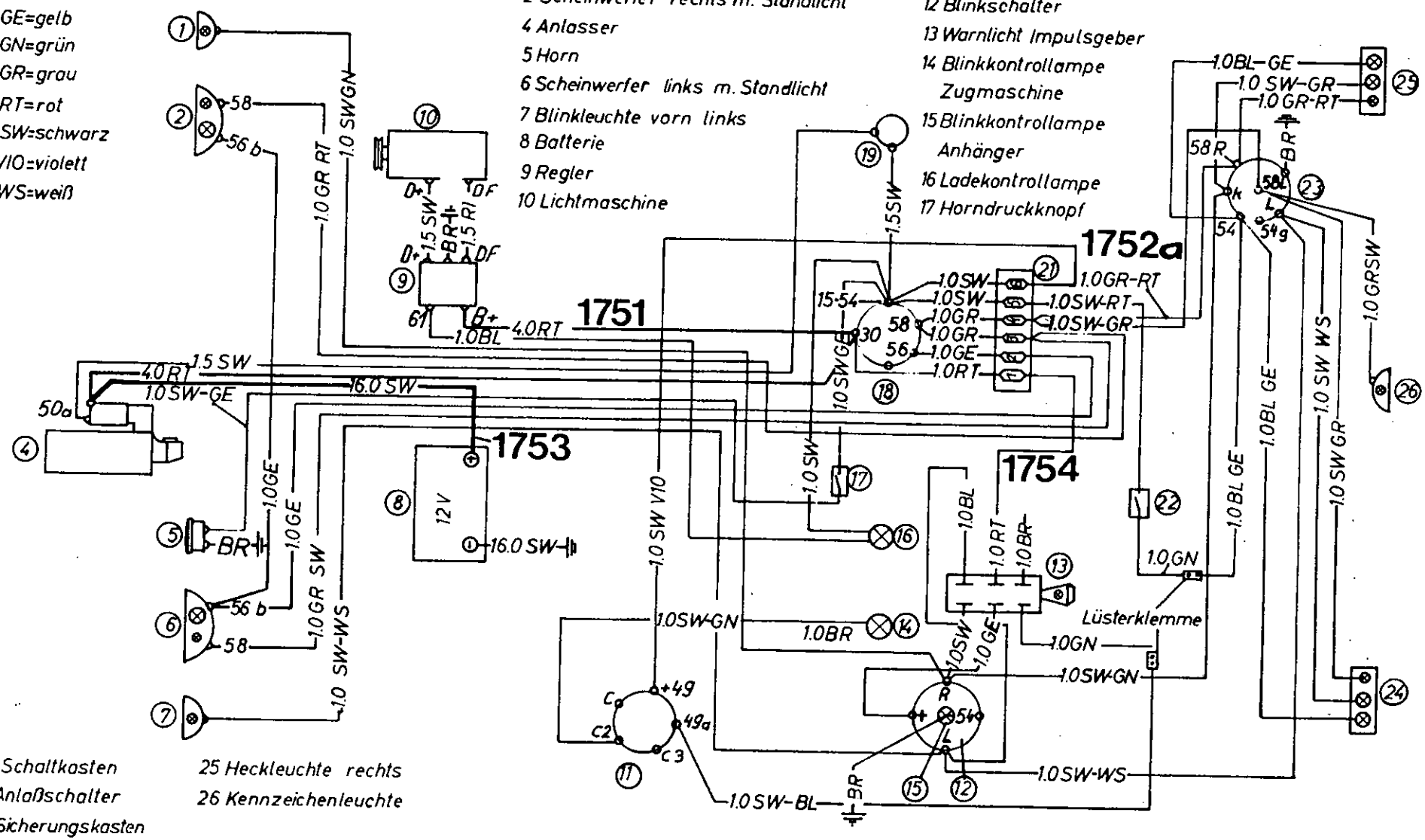

18 Schaltkasten
19 Anlaßschalter
21 Sicherungskasten
22 Bremslichtschalter
23 Steckdose
24 Heckleuchte links
25 Heckleuchte rechts
26 Kennzeichenleuchte

A 15 / A 16

Bildtafel — table — tableau — tabla — No. 26

A15 ab Maschine Nr. ca. 1 11981
A16 ab Maschine Nr. 11 10207

www.maskinisten.net

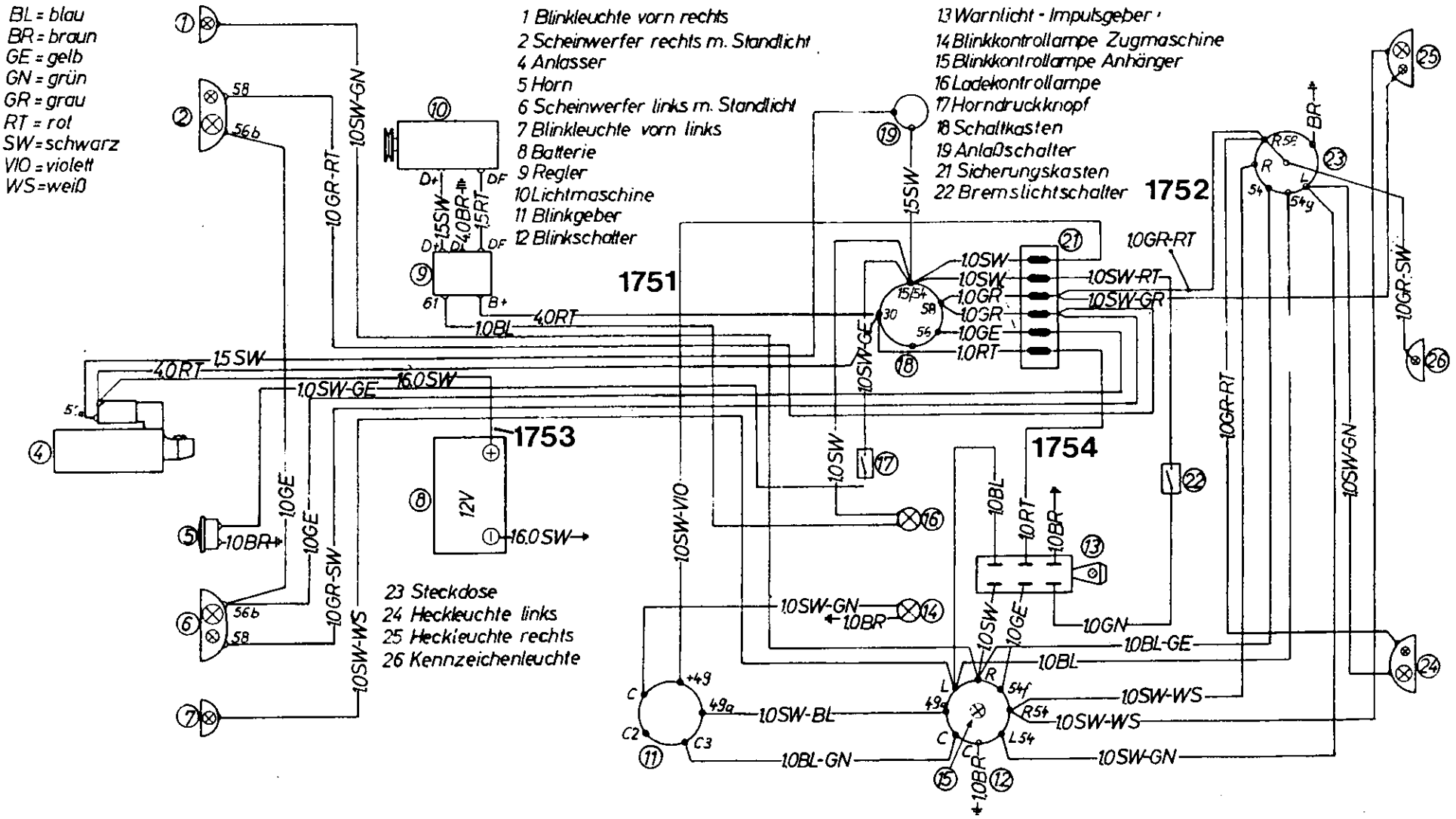

A16, bis Maschine Nr. 11 10206
A15, bis Maschine Nr. ca. 1 11980

Bildtafel — table — tableau — tabla — No. 25